Brown Stock Washing – A Review of the Literature

Ricardo B. Santos and Peter W. Hart
MWV Corp.
Applied Technology Specialist and Manager, New Technology
Covington, VA 24426 and Atlanta, GA 30327

Abstract

Brown stock washing is a complex, dynamic process which separates dirty wash water or weak black liquor (dissolved organic and inorganic material obtained from the pulp cooking process) from pulp fibers. The use of material balance techniques is of great importance in order to identify potential problems and determine how well the system is operating. The kraft pulping industry was the first known to combine pulp washing with the recovery of materials used and produced in the wood cooking process. The motivation behind materials recovery is economic and more recently, environmentally driven. The chemicals used in the kraft process are expensive as compared to those employed in the sulfite process. In order for the kraft process to be economically viable, it is imperative that a very high percentage of the cooking chemicals be recovered. To reach such high efficiency, a variety of washing systems and monitoring parameters have been developed. Antifoam additives and processing aids have also played an important role in increasing washing effectiveness. Antifoam materials help attain washing effectiveness by preventing entrapped air from forming in the system which allows for an easier, unimpeded flow of filtrate through the screens and washers.

Introduction

The kraft pulping industry is the first known to combine pulp washing with the recovery of materials used and produced in the wood cooking process [1, 2]**.** The initial motivation behind materials recovery is the fact that the chemicals used in the kraft process are expensive as compared to those employed in the sulfite process [2]. In order for the kraft process to be economically viable, it is imperative that a very high percentage of the cooking chemicals be recovered and reused [2]. An additional benefit of the recovery of the pulping chemicals and dissolved organics resulting from the

pulping process is that recovery significantly reduces the amount of water pollution associated with the kraft cooking process [1,3-6]. Control of brownstock washing and the additives employed in brownstock washing are also instrumental in reducing the concentration of dioxin precursors going forward to pulp bleaching [7]. Inefficient washing results in higher effluent color, COD, and BOD in the receiving waters associated with kraft pulp mills [8, 9]. Pulp washing provides desirable benefits associated with increased efficiency in both screening and bleaching of the pulp [3, 7]. Additionally, pulp quality is also improved by good washing [1, 3-6]. In short, when brown stock washing is performed poorly, all areas of the mill are impacted negatively. When it is done well, increased black liquor solids, decreased carryover to the bleach plant and/or paper machine, and decreased environmental impacts result.

Modern washing systems have been integrated into the heart of the kraft recovery cycle [10, 11]. Satisfactory pulp washing is achieved with a multi-stage counter-current sequence [5, 12] where the cleanest water is added in the last stage and the resulting filtrate is used in the preceding stage until it reaches the blow tank or wash zone in a continuous digester [13]. It is important that the amount of “clean water” added to the last washing stage be as minimal as possible to guarantee efficient solids removal because excessive “clean water” addition effectively results in decreased concentration of black liquor solids being sent to the evaporators [14].

When cooked wood chips are discharged from a digester they consist of a pulp-water suspension containing two main phases: the free liquor phase and the fiber phase. The fiber phase includes wood fibers and the liquor entrained inside the fiber. The entrained liquor is in close contact with the fibers and can be assumed to behave as an immobile liquor phase connected to the free liquor through mass transfer resistance [15]. The free liquor occupies the interstitial spaces between fibers and is quite easily removed during washing [16]. The entrained liquor can only be removed by diffusion or by capillary force [17]. Both of these processes are slow and dependent upon the time, temperature and chemical composition of the wash water [18, 19].

Washing is based on four basic processes: dilution (note when using dilution washing, it is important to have good mixing in the system), dewatering, diffusion and displacement. All types of washers apply some or all of these processes during pulp

washing. Some washing devises specifically enhance certain types of washing at the expense of other washing aspects. For instance, a press washer specifically enhances the dewatering aspect of washing at the expense of diffusion [18].

The simplest way to perform washing is to dilute the fiber suspension with wash water, mix the suspension and then filter or press the liquor out of the suspension [20]. In this washing scenario, one of the remaining washing principles, displacement, may be represented by placing a layer of clean wash water on top of the filter mat produced by the dewatering/thickening step and allowing the clean wash water to push the dirtier wash water out of the mat while replacing it within the fiber matrix.

The dominant type of pulp washing has been and still is the multistage rotary vacuum washer. Multistage vacuum washer systems employ dilution/thickening, mixing, diffusion, and displacement washing principles, i.e. every aspect of washing. Modern washing devices offer a more diverse number of techniques such as pressurized washers (CB and DD washers), presses, diffusion washers, and internal digester washing. These modern washing devices tend to enhance a select type of washing at the expense of other types of washing.

Brown stock washing practices and principles

Brown stock washing is a complex and very dynamic process which makes the use of material balance techniques of great importance in order to identify how well the system is operating. The operation of a brown stock washing system impacts a mill in three main areas [21]:

- Recovery of inorganic chemicals is a primary reason for employing pulp washing. Inorganic chemical recovery directly affects the cost associated with make-up chemical purchasing. In modern kraft mills, usually 96-99% of the inorganic cooking chemicals are recovered back into the system [1]
- Recovery of organic matter (dissolved lignin and carbohydrates) plays a role further downstream stream in the process. For mills that have oxygen delignification and/or bleaching sequences, elimination of organic chemicals in the pulp entering these processes reduces operating costs [9, 22]. Since these stages are oxidative in nature, improved lignin removal

through enhanced brown stock washing will result in reduced process chemical consumption and reduced load to the waste treatment plant [23].

- Finally, brown stock washing assists in the removal of undesirable material such as metals [24, 25], pitch, and wood extractives in general. Wood extractives that are not successfully removed from the pulp by washing tend to concentrate in downstream processes and form sticky deposits upon equipment which in turn can result in the production of off-quality paper through the formation of spots and holes [21].

Pulp washing can be obtained by mainly four different methods/mechanisms:

- Displacement: a cleaner liquid is added to the pulp mat in order to displace a dirtier one that is being carried with the pulp. The mechanism works via a pressure differential and pushes or displaces a similar amount of water from the mat. In vacuum drum or pressurized washers (Figure 2), displacement is usually obtained by shower water being applied on top of the sheet and allowed to flow into or through the sheet with the aid of a pressure gradient created by a vacuum underneath the sheet or by pressurized shower water being applied to the top of the pulp mat. Any form of resistance towards uniform drainage such as entrained air bubbles [26] or plugged face wires can lead to non-uniform pulp washing via displacement. Due to these and a number of other factors potentially occurring during displacement washing, multiple displacement steps are required to obtain higher than 80% displacement washing efficiency [13]. Figure 1 shows the ideal operation and theory of displacement washing.

  Displacement washing significantly reduces the amount of dissolved solids in the pulp mat without significantly altering the consistency of the pulp mat within the system. Typically, the amount of water displaced from the mat is about equivalent to the amount of water being applied to the mat via the showers. One significant deviation from this is when channels form in

the mat which allows wash water to pass all the way through the mat and into the resulting washing filtrate from this stage. Ideally, all of the shower water would be applied in a uniform manner and completely push or displace all of the free dirty water from the mat. The ideal amount of wash water applied would be just enough to accomplish this displacement without any of the applied wash water going into the pulp filtrate [10, 13]. Typically, five shower bars are used to evenly and uniformly apply wash water to the pulp mat surface.

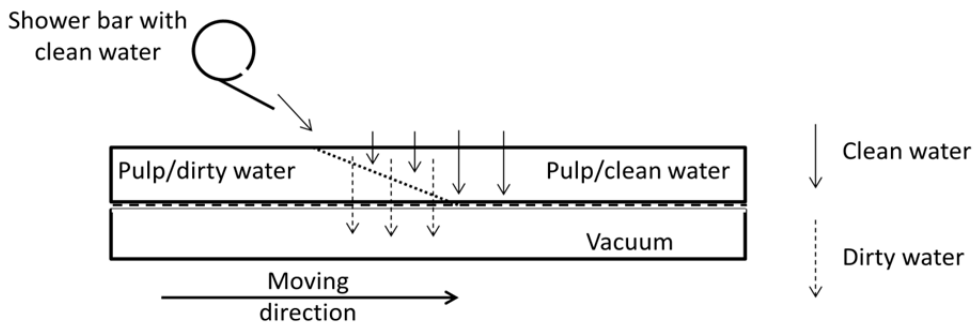

Figure 1. Displacement washing.

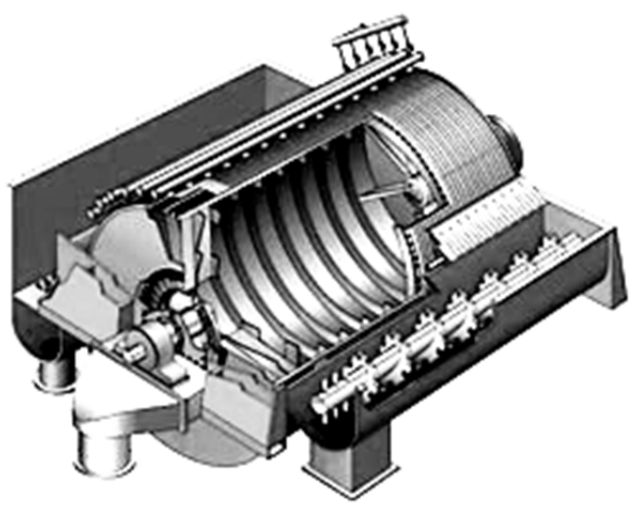

Figure 2. Vacuum drum washer.

- Dilution/Extraction: Dilution and extraction are two different types of washing that are closely linked and work extremely well together. Because they are so closely linked, they will be discussed together. The combined washing effect may be described as the liquor/pulp suspension being diluted with cleaner water followed by subsequent thickening of the slurry. It is the oldest method of pulp washing. It is important to note that the dilution step does not decrease the amount of dissolved solids within a pulp/liquor system. In many cases, dilution washing actually increases the total amount of dissolved solids within the system [26]. It also increases the total volume of the pulp/liquor suspension being washed. The important aspect of dilution washing is that it decreases the concentration of dissolved solids within a given system [26].

The extraction washing step is accomplished by removing liquid from the pulp/liquor suspension. The net result is a decrease in the volume of the pulp/liquor suspension and a corresponding increase in the consistency [26] The extraction stage does not change the concentration of dissolved solids in the pulp/liquor suspension, only the volume of liquor in the suspension. As a result, extraction washing reduces the total amount of dissolved solids in the pulp/liquor suspension [26].

Extraction efficiency is dependent on the ratio of incoming consistency/outgoing consistency [13]. Pulp presses are good examples of the extraction washing principle and have a very low consistency ratio with a high washing efficiency. Presses are usually more beneficial in the first stage of washing since they can remove air entrained in the pulp thus improving the next washing stage [18]. Figure 3 shows how a press operates.

Dilution/extraction is the first part of the washing process performed in a traditional vacuum drum washer. The pulp is diluted as it is pumped into the washer inlet vat. Next, the pulp mat is formed on the washer drum via

extraction of wash water into the droplet and transferred towards the shower bars for the start of the displacement washing process.

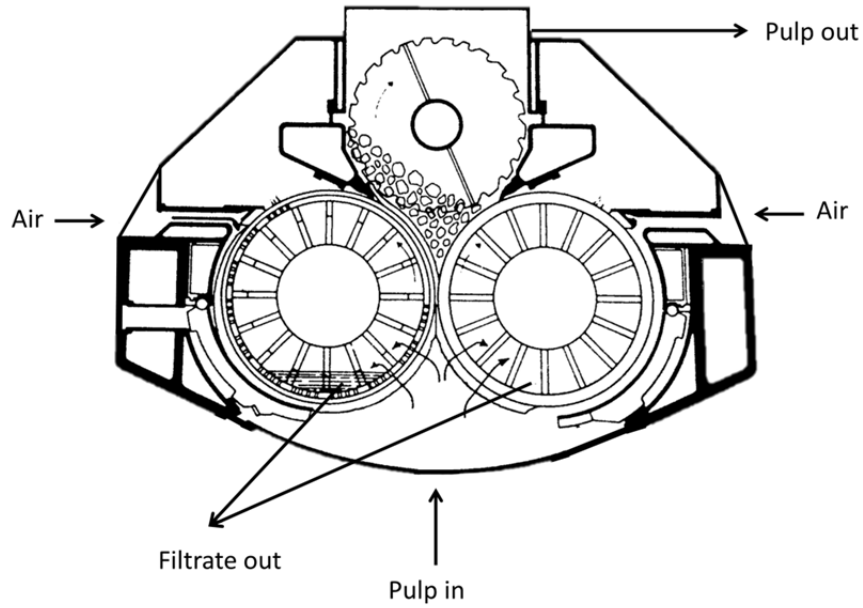

Figure 3: Pulp press washing equipment.

- Diffusion is a form of washing which is driven by concentration differences between the dissolved solids within the fiber and in the bulk liquid. Diffusion is characterized by the commutation of liquid inside fiber to a cleaner liquid outside of the fiber [21]. It requires relatively long periods of contact to allow diffusion and leaching of solids from fiber [13, 27].This concept was first used in Kamyr digesters which provide close to an ideal environment for diffusion of dissolved solids out of the fiber (up to four hours retention time and elevated temperatures close to 140º C). Another parameter that shows influence during this washing is dilution factor. A higher dilution factor results in higher washing efficiency due to solids concentration reduction [13].

Washer modeling

- The washing system can be modeled using either individual washers (Figure 4) or using the entire washing line as a single unit. Some work has focused upon modeling washing performance upon different parts of a washer drum [28]. The minimum number of variables required to model a single stage or a holistic model of an entire washing line are shown in the figure below. The model includes equipment based on dilution/extraction, displacement, and/or a combination of all of these principles [21]. A reasonable attempt has also been made to model brown stock washing performance without using flow measurements [29]. It is important to determine the washing efficiency of the entire washing line treating the entire line as a single unit but it is equally important to determine the performance of each individual washing device in order to pinpoint potential problem areas that may be improved.

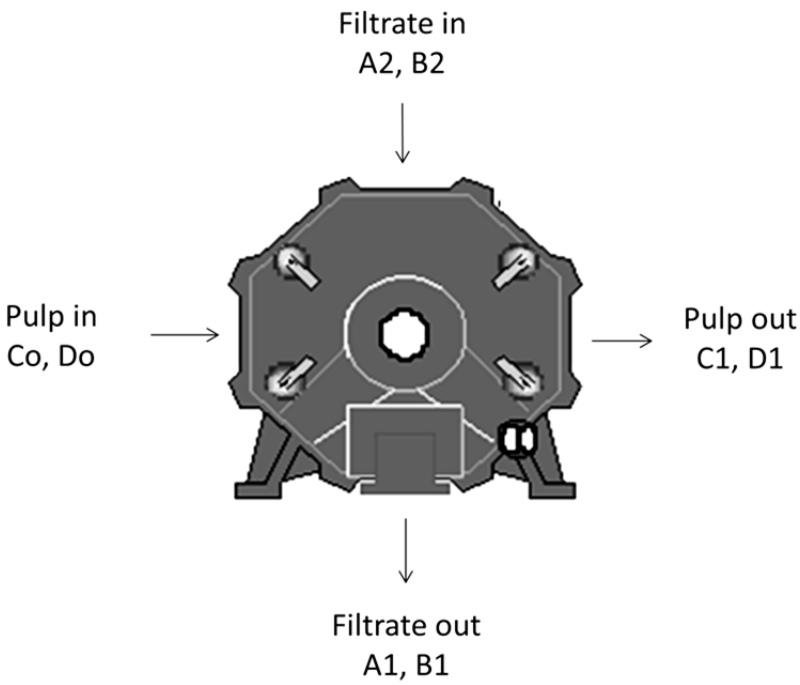

Figure 4. Example of individual washer modeling.

Where:

Co and C1: filtrate with pulp entering and leaving (t/ADT)

Do and D1: pulp filtrate dissolved solids entering and leaving (wt. %)

A1: filtrate leaving washer (t/ADT)

A2: shower filtrate entering the washer (t/ADT)

B1 and B2: filtrate dissolved solids in the shower water and exiting filtrate (wt. %)

Standard modeling programs such as WinGEMS [30] or Aspen [31] may be used to prepare material and energy balances. These programs work quite well for the material balance aspects but great care is needed when attempting to perform energy balances around brown stock washing systems. Brown stock washing systems tend to have significant amounts of surface area between the hoods, filtrate tanks, and piping which contribute towards a significant amount of heat loss. Standard material and energy balance programs do not take these forms of heat loss into account and frequently over predict the resulting stock and filtrate temperatures.

Brownstock modeling has been performed in both dynamic [19, 32] and steady state [33] models [34]. Several models have focused upon the displacement aspect of pulp washing [35, 36]. Frequently, the steady state models have been combined with economic data to determine the impact of rapidly fluctuating and decoupled energy and raw material costs [33].

The results from these models tend to give divergent optimization responses depending upon the species of wood, pulping techniques employed, and the type of equipment used in testing [37]. Hence, a washing model that is consistent with the specific mill being evaluated or at the minimum, a model that has been experimentally tuned to the mill in question, should be used when attempting to optimize brown stock washing employing modeling techniques [37].

Washing efficiency calculations

The main purpose of brown stock washing is to separate spent cooking chemicals and wood reaction products (dissolved organics) from the pulp being sent forward for further processing. Ideally, this separation process will be accomplished with a minimal amount of added wash water or processing chemicals. As a result, the efficiency of a washing system in its most basic form can be calculated as the ratio of dissolved solids going to evaporation to the amount of dissolved solids initially present in the washing

system. For a mill with batch digesters, the initial dissolved solids present in the system would be those in the blow tank. In a continuous digester, the initial dissolved solids would be determined in the washing zone. The per cent washing efficiency calculation is shown below.

% efficiency = (dissolved solids to evaporation (weight)/ton pulp) / (dissolved solids to system (weight)/ton pulp)

Under ideal washing conditions, each pulp fiber will be uniformly treated with its share of wash water. When process or mechanical conditions prevent this from happening, reduced washing efficiency occurs. As a result of these decreases in efficiency, researchers have developed several different ways to determine washing efficiency calculations. The most common methods are displacement ratio, equivalent displacement ratio, Norden's method [20] and solids reduction ratio

Displacement ratio (DR)

Displacement ratio was first developed by Perkins, Welsh, and Mappus [38] to compare the amount of dissolved solids removed from the pulp mat to the maximum amount of solids that could be removed from the pulp mat if the displacement of dirty water in the vat with cleaner shower water was 100% effective. The displacement ratio is a dimensionless number between 0 and 1. If the DR is 1, that means that perfect displacement occurred. If the DR is zero, no displacement occurred. The minimum amount of possible solids in the mat is the amount of dissolved solids present in the shower water (cleanest water added). When shower water is added to the pulp mat (Figure 1) it displaces (pushes) the dirty water washing out of the mat replacing it with the cleaner shower water. DR is commonly used to compare the washing efficiency of similar types of equipment [20, 21].

DR is calculated according to the equation shown below

DR = [(Solids in vat)-(Solids in Mat)]/[(Solids in vat)-(Solids in shower water)]

or

$$DR = (Sv-Sm) / (Sv-Sw)$$

Where:

Sv: Solids concentration in the vat

Sm: Solids concentration in the mat leaving the washer

Sw: Solids concentration in shower water

Equivalent displacement ratio (EDR)

As washing devices have changed, new and improved efficiency calculations had to be invented to accommodate the new washing methods and to compare washers of different designs. When IMPCO developed the first compaction baffle washers, there was no good method to determine the DR and compare it to the traditional DR used for rotary washer drums. Therefore, new methods were developed to calculate an equivalent displacement ratio.

The equivalent displacement ratio (EDR) is used to compare the actual washer with a hypothetical one, operating at a standard inlet consistency of 1% and outlet of 12%. For the hypothetical washer, EDR is calculated with the following formula:

$$(1 – EDR) = (1 – DR)(DCF)(ICF)$$

Where:

DCF = discharge correction factor = Ld /7.333

ICF = inlet correction factor = 99.0(Li+DF)/[Li (99.0+DF) – Ld (99.0–Li) (1–DR)]

Ld = Amount of liquor in the discharged pulp, [(100 – discharge consistency)/discharge consistency] reported as mass of liquor/mass of pulp

Li = Amount of liquor inside the vat or inlet, [(100 – inlet consistency)/inlet consistency] reported as mass of liquor/mass of pulp

DR = Displacement Ratio

DF = Dilution Factor

The term equivalent means that the hypothetical washer has the same dilution factor as the actual one, the solid loss being the same in both cases. EDR is a useful

mathematical tool for comparing washers of different designs. The washer with the highest EDR value for the same dilution factor will be the most effective one [39].

Norden method

Norden number/method describes washer effectiveness comparing the washer to a series of dilution extraction washers operating with an inlet consistency of 1% and a mat discharge consistency of 10% with no liquor displacement. Modified Norden numbers use different mat discharge consistencies and have a subscript after the N to let the reader know what the discharge consistency actually is. For instance, an N_{12} number would have a mat discharge consistency in the theoretical dilution/extraction washer of 12% instead of 10%. The method was developed by Norden et al. in 1966 [20] and defines the number of dilution/extraction washing stages that will give the same washing efficiency as the washer in consideration. Equipment such as vacuum drums and single stage diffusers present the lowest Norden numbers indicating low washing efficiency. Properly operating Kamyr digesters with extended washing zones (up to 4 hours) present the highest Norden numbers and consequently the highest washing efficiency [13]. The Norden number may be calculated with the following formula:

$$Nn = \ln ((V1 (W1 – X0)/V0(W0 – X1)) / \ln (Y1/V0)$$

Where:

N is the Norden number

V1: flow of liquor to the vat.

W1: weight fraction of alkali (Na_2SO_4) in the vat.

X0: weight fraction of alkali in the filtrate to filtrate tank.

V0: flow of liquor out with the mat.

W0: weight fraction of alkali (Na_2SO_4) out with the mat.

X1: weight fraction of alkali in the shower water.

Y1: flow of liquor in the shower water.

Ln: natural log

The Norden number or Norden efficiency factor as it is sometimes called is an excellent method of comparing washing devices that discharge at different mat consistencies. The device with the higher Norden number has the better washing.

Solids reduction ratio

Due to its calculation complexity, solids reduction ratio is impractical to use in operating systems. The method was developed by Perkins, Welsh and Mappus to relate the solids content of the mat liquor leaving the final washer to the solids content of the liquor prior to any washing. The concept was a good way to demonstrate solids content reduction as function of the solids content of the liquor entering the stage as well as to re-emphasize washing systems as fractionating devices. For details on the solids reduction ratio calculations, the reader is referred to reference [26].

Washing system variables

When evaluating a brown stock washing system, it is best to examine the system as a holistic unit. Even when looking at the entire washer system, the number of variables that need to be evaluated are considerable. The main variables will be discussed below. Several of the ancillary system variables will be left for the reader to determine for their specific washing line.

Stock consistency to the vat and sheet formation

When operating a washing device that relies upon dilution/extraction as one of its main washing principles (e.g. rotary vacuum washers), the stock inlet consistency is of extreme importance. Ideally, the inlet consistency for a rotary vacuum washer should be about 1.0 – 1.5%. These washers can operate at much higher inlet consistencies but the quality of washing suffers. When the inlet consistency is increased significantly, to the 2-3% range, these devices tend to become more of a pulp conveyor which moves pulp from one stage to another with very little washing. The highest washing efficiency is obtained when stock consistency to the vat is maintained as low as possible; preferably in the 1.5% range. Low vat consistency typically results in good, uniform sheet formation across the washer which results in a uniform displacement of the dirty liquor. The low vat

consistency and uniform mat formation allows each fiber to be exposed to its share of wash water resulting in uniform and efficient pulp washing. Also, the high amount of water in the stock results in better solids removal, overall [10]. Improved sheet formation can also be a function of washer design [10]. It is important to place stock pipes and dilution water in such a manner as to maximize mixing prior to the vat [40, 41]. Stock and dilution lines placed in a Y configuration often result in poor mixing. A 90º joint between the two results in more turbulent flow with better mixing ability [18].

The drawback of operation in low consistency is the reduced production rate across the washer. As stated by Smith [18], vat consistency is almost a square root of washing capacity. An increase of 100% in consistency (consistency from 1 to 2%) implies in washer capacity increased by 52%. Nevertheless one should be aware of the negative washing effects of running a washer at high inlet consistency.

Drum speed

The drum speed is also an important variable when one is trying to achieve improved washing efficiency. Drum speed should vary as a function of vat level and/or sheet formation. It is always an improvement when the pulp mat in maintained to a certain thickness across the washer. If the mat is too thick, it will carry over more of the dirty liquor because the shower water will not be able to fully displace the dirty liquid retained in the mat when it was formed on the drum. On the other hand, a washer operating with an extremely thin pulp mat can be challenging to run. The thin mat will not provide good resistance to air penetration of the sheet into the liquor and the drum will tend to seal over resulting in no drainage and no liquor displacement.

Some washers use drum speed as the vat level control. In these types of washers, a higher drum speed maximizes water removal from the drum vat which reduces the vat level. The opposite is also true. When considering the production rate, a 100% increase in cylinder speed (from 2-4 rpm) will result in a 42% increase in production and the combination of drum speed and vat consistency should be the best available option when one is looking for productivity increase [18].

Entrained Air in the pulp and liquor

Prevention and elimination of entrained air is also of importance when it comes to maximizing brown stock washing [11]. Air/bubble formation can occur in the drum vat when the vat level is low resulting in a more turbulent system. Also, filtrate tank design and level set point can contribute to air entrainment in the liquor used to dilute the pulp between stages. Drop leg seal pots inside the filtrate tanks should be designed to allow air removal from the liquor and the filtrate level should not be above the top of the centerline of the horizontal run of the dropleg and definitely not above the standpipe or seal pot. Air trapped in the pulp also increases the drum speed by decreasing stock drainability and reduces displacement ratio [10]. Basically, entrained air bubbles in the pulp mat behave as solids and plug the drainage channels within the mat resulting in a decrease in the displacement ratio. It is important to note that under washing in one area of the mat cannot be compensated by over washing in another area making elimination of air entrainment and good sheet formation over the drum a requirement for optimum washing [10].

Dilution factor

One of the first and most important variables to be considered during brown stock washing is the dilution factor (DF). [14, 42-45] It is defined as the amount of excess liquor added to a washing system. DF is important for determining the overall system material balance and performance. The DF should be minimized to reduce steam usage during black liquor evaporation [10]. DF can be defined as liquor added to pulp in terms of air dried pulp (AD) or oven dried (OD) [21]. Typically DF varies from 2-4.5 m^3/ODT [14, 46, 47].

In theory, the DF should be maintained constant at each stage of washing but in reality it rarely is. Extra water input into the washing system (e.g. seal water, fresh water hoses placed into the system, filtrate tank level control water, etc.) will result in changes in the DF between stages. A negative DF implies that less water than the amount present in the discharged sheet was added to the system [8]. DF may be calculated by the following equation:

$$DF = WS - C1$$

Where:

WS: Washing shower (ton liquor/ton pulp)

C1: Liquor discharged with pulp (ton liquor/ton pulp)

Wash liquor distribution and temperature

The golden rule of pulp washing is that "each fiber should get the same amount of washing liquor". Washing liquor should be gently and uniformly applied all the way across the washer [10]. Shower header design and set up will determine the liquor distribution and flow rate. With fewer shower headers, liquor flow rates need to be increased to achieve the desired displacement [18]. Also, an improper shower bar set up can result in pulp mat disruption (holes) which will reduce vacuum and washer efficiency. It is common to have five shower bars arranged in a symmetrical manner on top of the drum [48].

When it comes to washing, liquor temperature plays an important part by influencing the viscosity of the washing liquor. Higher temperature results in lower viscosity and consequently better diffusion of liquor into the mat resulting in better washing. Washing temperatures of 145º F and 155ºF are the optimum point for vacuum drum washers running pine and hardwood, respectively [18]. Typically, operating a vacuum drum washer line with higher applied wash water temperature on the last washing stage results in liquor flashing in the first washer drop leg. When flashing occurs, washing efficiency decreases and, in extreme cases, the resulting vapor bubble can mechanically damage the washer.

Pulp discharge consistency

It is common knowledge that a higher discharge consistency will provide the system with a better displacement ratio and consequently better washing [10]. The impact of discharge consistency tends to be more important when the discharge consistency is low. Once the discharge consistency increases beyond about 14%, the impact of increasing discharge consistency upon washing efficiency has been found to be less important [18]. To better illustrate this example, Table I shows the impact of discharge constancy upon soda loss assuming a constant dissolved soda concentration of 10 g/L and the discharge consistency varying from 8 to 16%. The results in Table I

clearly show that once the discharge consistency gets much above 14-16%, the impact of discharge consistency clearly diminishes. Table II presents a summary of the variables influencing solids removal during washing [13]

Table I: Impact of Discharge Consistency Upon Soda Loss Assuming 10 grams soda per Liter of filtrate.

Discharge Consistency (%)	Mass Filtrate/ Mass Fiber	Pounds Soda Loss per OD Ton Pulp
8	11.5	240
10	9.0	188
12	7.3	153
14	6.1	128
16	5.3	109

Table II: Summary of variables influencing solids removal during washing.

	Dependency
Pulp characteriztics	Pulping process Drainability Wood specie
Shower liquor	Temperature Distribution Arrangement
Sheet formation	Specific load Vat consistency Drum speed
Operational	Dilution factor Pulp temperature Air entrainment Black liquor solids content Wire mesh characteristics Washer incrustations Discharge consistency

Determining solids losses in washing systems

Modern washing systems do a good job of chemical recovery. Even so, achievement of 100% efficiency in dissolved solids recovery is nearly impossible. Existing methods allow one to quantify and track those losses and improve the washing system.

One of the most common and widely used ways to quantify chemical losses is the so called saltcake or soda loss determination. There are other techniques such as dissolved solids and chemical oxygen demand (COD) which will also be explored in this section. Although most commonly used in mills, these individual techniques have been

challenged by on-line measurements that claim to more representative of the real losses [49-55].

Soda loss determination can be reported as the amount water washable sodium that can be extracted from the pulp [56, 57]. It can also be determined as the amount of sodium extracted from the pulp by using hydrochloric acid. Saltcake can be expressed as $NaSO_4$, NaOH, or Na_2O. Both methods are fast, and accurate making this method the most preferable among the industry.

Dissolved solids is a simple method to measure how much of the solids are being carried over with the pulp and not participating in the recovery cycle. It is performed by collecting a liquor sample from the mat and placing it under heat for water evaporation. The dry solids are the dissolved solids and can be reported as % dissolved solids carried over from washing.

COD is another method used to determine solids losses in a washing system. The drawback of performing this test on a routine basis is its complexity and extended time of reactions. The biggest advantage is the independency of the method in terms of adsorption effects [10].

Washing equipment

For many years rotary vacuum drums dominated washing systems across the world. Rotary drum washers still wash more tons of pulp than any other type of washer but nowadays, a number of different systems and equipment combinations are available to challenge vacuum drum efficiency [13]. Over the years several studies on filter washing, diffusers and press washing have been published [6, 38, 45, 42-44, 57-75]. Several of these systems are reviewed in more detail below. The systems reviewed are Rotary vaccum drums, Rotary pressurized drums (Compaction baffle (CB) and Displacement Drum (DD) washers), Horizontal belt washers, Extraction presses, Atmospheric diffusers, and Pressurized diffusers.

Rotary vaccum drums

Rotary vacuum drums are the most common device used in brown stock washing. It applies the drop leg principle to create vacuum and remove dirty liquid from pulp.

Operated at a consistency range from 0.8 (inlet) to 18% (outlet) with a production capacity of 5-12 BDT/m^2 and a system DR that is considered low (0.65-0.80). Vacuum washers have limitations in terms of temperature (barometric leg) with upper limit at 85ºC. The main washing principals in this technology are dilution/extraction and displacement. Low retention times result in limited amounts of diffusion. Air entrainment and foaming are usually the biggest source of trouble when running these washers [42, 44]. Face wire pluggage may also result in significant washer upsets.

Compaction Baffle (CB)

The CB washer follows similar principles to the rotary vacuum drum washer with the advantage of higher temperature limits (90-95ºC). Additionally, the hydrodynamic baffle imparts pressing to the pulp mat enabling the removal of part of the filtrate carried with the pulp. It also handles a higher inlet consistency of 2-5% and delivers higher discharge consistencies (12-20%) with higher tonnage capacity (30 BDT/m^2). Another advantage is the smaller area required for installation with smaller filtrate tank requirements. CB washers do not require the minimum 30 foot vertical drop that vacuum drum washers require as the pressure differential across the washer drum is supplied via the pressurized washer instead of the barometric leg vacuum generated in the drop leg of a vacuum washer.

Displacement drum (DD-Washer)

DD washers are multi-stage devices (2-4 stages) upon a single drum. They are capable of operating at high temperatures (85-95ºC) and high inlet (5-12%) consistency to provide higher retention time and displacement. DD washer filtrate systems operate in a hydraulically full manner and are pumped through the entire washer system thus reducing the amount of entrained air in the system. The washer runs at loads of up to 20 BDT/m^2.

Horizontal belt washers

With a very low dilution factor (about 1) this washer can still obtain high solids removal. It is basically a fourdrinier section of a paper machine with the presence of five

or more displacement stages along the belt. It has limitations in terms of operation temperature. The belt washer is an excellent device for removing dissolved inorganic solids. It does appear to have some limitations in the removal of dissolved organic material, especially the material within the fiber.

Extraction presses

Extraction presses apply the principle of dilution/thickening of the pulp. They have the advantage of removing liquor from the fiber lumen in a more efficient and quicker manner as compared to displacement and/or diffusion washing [1]. Presses also remove foaming interferences during washing [1]. They operate at inlet consistencies that vary from 2.5-6.0% and discharges that can achieve 40% consistency. It requires a smaller installation area and filtrate tank than several of the other washers. A press can achieve up to 40tpd/m². Usually the washing system is used with pulps where the principle of displacement is not effective.

Pressurized and atmospheric diffusers

As the name states, diffusion is the main washing principal taking place during this washing operation. It is characterized by the long period of contact between pulp and washing liquor. No air is allowed in the system that requires total submersion of the pulp into the liquor. The rate of flow determines diffuser washing capacity and is limited by pressure gradient, pulp mat resistance and liquor viscosity [6]. The optimum pressure differential during the washing process was found to be in the range of 1.5-2.0 kp/cm^2 [52]

Pressurized diffusers are characterized by their simple operation with a small required installation area. It has a washing period ranging from 90-120 minutes. The system provides high washing efficiency. Atmospheric diffusers have the disadvantage of not handling temperatures above 100ºC.

The role of antifoam additives

In a kraft mill, the use of antifoam additives allows for a more efficient screening and washing of the pulp. This is achieved by preventing entrapped air from forming in the system which allows for an easier flow of stock through the screens and washers.

For many years, the kraft industry has utilized mineral oils or kerosene based antifoams. At the time, these products allowed for significant increases in production and minimization of chemical losses in the recovery cycle and minimized carryover to the bleach plant [76]. The use of oil based antifoam also resulted in some negative impacts for the industry, especially in the paper machine with pitch deposits of high molecular weight fractions of oil and waxes [77]. Environmental impacts were also a concern since dioxin and furan precursors could be found in antifoam products [78] and oil related sheens could often be detected upon the surface of receiving waters. Another negative of its use was price volatility as it depended on petroleum supply/demand.

Since 1943 silicone has found a steady increase in its use and a vast array of products started to be developed and used in the pulp and paper industry [79]. By the late 1980s, environmental concerns over antifoam additives (oils and waxes) provided greater motivation toward the use of silicone based antifoam in brown stock washing. Silicone antifoam products demonstrated effectiveness at very low dosages allowing for not only foam prevention but also improvements in washer drainage with substantial gains in chemicals for recovery and bleach plant.

Silicone terminology is commonly applied to polymeric materials with Si-O- as the main repeated unit. Covalent bonds of inorganic/organic substituents may also be present in the molecule.

Effective silicone antifoam products have to perform well in the challenging environment of the pulp and paper industry. To do so, some key features are necessary such as: access to bubbles on the surface with low product application (product inter- and intra-molecular forces need to be low); the product molecule needs to be able to rotate allowing for the proper orientation on the bubble surface; the product molecule needs to be incompatible with black liquor to prevent product solubilization and loss of effectiveness (hydrophobicity); be stable in terms of viscosity at different temperatures,

and be able to easily distribute over the surface (low surface tension) [76]. Aqueous silicone emulsions are the most preferred choice in the pulp and paper industry [80].

As important as product features (proper formulation), feed points in the process are also a key to successful application. Feed points are usually where foam is most problematic and can be easily identified by locations where air entrainment to the system is most severe [80]. Silicone technology is indeed less problematic than mineral oil. Nevertheless deposits will still occurs if product formulation and/or application are incorrect [77].

Some examples of problematic situations in pulp mills were explored by Hoekstra 2007 [77]. The author describes a situation in a pine bleached kraft mill which made the transition from mineral oil to concentrated silicone due to a new washer system installation. After transitioning, the mill ran for approximately 20 hours and encountered severe deposition of silicone material. The mill fought silicone deposits for months averaging 5000 tons of unsalable pulp per month. Finally a new formulation of silicone antifoam with no deposition tendency was introduced and great improvement in pulp quality was obtained. The new formulation was a more effective antifoam product which reduced the application rate to the system. Also stabilizers that reduced deposition were added to the new formulation. Black liquor characteristics and hemicellulose content were found to be directly related to low dispersability of previous antifoam products allowing for deposit formation. High hemicellulose content in black liquor was found to increase deposition likelihood. Temperature increase also appears to contribute to deposit formation as well as high calcium concentration in the system.

In another mill producing unbleached kraft pine pulp the change in antifoam product allowed an increase of 4% in mat consistency (better drainage), reduction of 4% in solids carryover, reduction of 7% in shower water usage, and a 75% reduction in antifoam usage (on a pound per ton of pulp basis).

In order to avoid or minimize potential problems when transitioning from one antifoam formulation to another, a mill should perform lab experiments that allow deposit potential and product effectiveness to be determined. A simple test consisting of the use of pulp mill black liquor samples heated to process temperatures with the addition of antifoam should be performed. Shear is applied to the sample once process temperature is

reached. The sample is then set aside and observed for antifoam separation and deposit formation. The same test can be conducted at different temperatures and pH to test different possible scenarios encountered in the pulp mill [77].

Conclusions

Several different operational parameters have been discussed and the potential impact upon operational efficiency has been reviewed. These include inlet consistency, discharge consistency, stock temperature, shower water flow, drum speed and antifoam application. The different types of washing, dilution/extraction, displacement, and diffusion have also been reviewed. The tendency for modern washing devices to enhance one, or a few, of these washing types at the expense of others has also been discussed. Methods to compare the efficiency of different washing devices such as Norden number or EDR have also been reviewed. Finally, the application of various dynamic and steady state modeling methods has been highlighted.

In general, it is important to understand individual mill specific washing devices in order to optimize the operation of a specific set of brown stock washers. The mill specific needs, wood species, pulping technologies, and energy considerations need to be incorporated into the model to optimize a specific mill system. When all of the mill specific considerations are taken into account, it is possible to balance soda loss considerations with the evaporator, production, quality, and environmental impacts required to optimize a specific mill.

References

1. Rydholm, S.A. (1965) Pulping Processes. New York: Interscience Publishers
2. Crotogino R.H., Poirier N.A., Trinh D.T. (1987), The principles of pulp washing, Tappi Journal, 70(6):95-103
3. Wilson J. (1993) Results from improved brown stock washing, 1993 TAPPI Pulping Conference, Proceedings, Boston, MA, Nov 1-3, pp155-157.
4. Brunes, B. "Optimal sulfitlut utvinning vid spritframstallning och industning (Consideration of economic limit for waste liquor removal from standpoint of evaporation only)" Svensk Papperstidning, v 51, n 15, p 336-342, Aug 15, 1948.

5. Scholander, A., Svensk Papperstid., 53, 95, (1950) Scholander, A. "Precipitation of Calcium Sulfate from Supersaturated Sulfite Waste Liquor." Svensk Papperstidning, 53, 681 (1950)
6. Venemark, E., Om diffusortvattning av sulfatmass, Svensk Papperstid., (1943), 46, 315
7. Hise, R.G., Streisel, R.C., Bills, A., M., “The effect of brownstock washing, in the C stage on formation of AOX and chlorophenols during bleaching,” TAPPI J., Vol. 75, No. 2, Feb. 1992, pp. 57-62. (on pg 2)
8. Mimms, A.; et al. (Ed.). Kraft pulping: a compilation of notes. Atlanta: Tappi Press, 1989, p.110-128.
9. Tervola P., Gullichsen J. (2007), Confidence limits in mass balances with application to calculation of pulp washing efficiency, Appita Journal, 60(6):474-481.
10. Shackford, L. – Unraveling the mystery of washing efficiency determination, Proc. Tappi Pulping Conf., San Francisco, CA, USA, TAPPI Press, p. 77-89, (1997).
11. Lobo, L.A, Bolton, T.S. Brown stock washing fundamentals: Enhancing drainage through chemistry, Part 1, Tappi Peers, Oct 2012 Savannah, Georgia).
12. VanArsdel, W.B. Theory of pulp-washers, Paper Industry, v 17, n 12, p 943-947, Mar, 1936
13. Smook, G.A. 2002. Handbook for pulp & paper technologists. Third edition. Angus Wilde Publications Inc, Vancouver, British Columbia. 425p
14. Compton, R., Economic Analysis of Brown Stock Washing Systems. TAPPI Pulping Conference Proceedings, Atlanta: Tappi press,1997. p. 257-272.
15. Ala-Kaila 1998. (Ala-Kaila K (1998) Modeling of mass transfer phenomena in pulp-water suspensions. Doctoral thesis. Helsinki, Helsinki University of Technology.
16. Kumar, J. and Kukreja, V.K., “Efficiency of Brown Stock Pulp Washing in Liquid Properties,” Int. J. of Eng,. Sci. and Tech., Vol 3, No 11, Nov 2011, pp. 8004 – 8011. (on pg 2)

17. Kapanen, J. and Kuusisto, L., “A New Brownstock Washing Method for Economical Pulp Production,” TAPPISA, African Pulp and Paper Week Proceedings, Durban, Oct 8-11, 2002, OnLine: http://www.tappsa.co.za/archive/APPW2002/Title/A_new_brown_stock_washing_meth/a_new_brown_stock_washing_meth.html (on pg 2)
18. Smyth J. A., "The Mathematics and Variables of Counter- Current Brown Stock Washing", Tappi Brown Stock Washing Short Course Notes, p21-26, (1982).
19. Wang, R.X., Dynamic Simulation of Brown Stock Washers and Bleach Plants, Master of Applied Science Thesis, Univ. of British Columbia, July 1993
20. Norden, H. V. and Jarvekainen, M., Analysis of a pulp washing filter, Kemian Teollisuus 23(4): 344-351(1966)
21. Andrade, M.A. Fundamentos do Processo de Lavagem, Brasil, ABTCP, 2000, p.275.
22. Colodette, J.L., Gomes, C., Rabelo, M., Eiras, K. (2005) Progress in eucalyptus kraft pulp bleaching. 2nd International Colloquium on Eucalyptus Pulp. Proceedings.
23. McCanty, K. “Oxigen delignification,” Ch. 13, Bleaching of Pulp, 5th Ed., (Hart, P.W. and Rudie, A.W., eds), Tappi Press, Atlanta, GA, August, 2012, pp. 389-410.
24. Rosen, A., *“Adsorption of Sodium Ions on Kraft Pulp Fibers During Washing"*, TAPPI J., vol. *58*, No. *9*, Sept. 1995, p. 156-161.
25. Olsson A. and Rydin S., “Washing of Pulps, Part 2”, Svensk Papperst., 78(15), 1975, pp549-552.
26. Perkins, J.K. “Brown stock Washing,” Ch. XI, Pulp and Paper Manufacture, Vol. 5, (Grace, T.M., Malcom, E.W., Kocurek, M.J., eds), PPTAC, Montreal, QC, Reprint 2008, pp. 279-316.
27. Robertson, J.D., An evaluation of pulp washing in terms of diffusion and displacement, Tappi, 39, nº 12, 158A (1956)
28. Kukreja, V.K. and Ray, A.K., “Mathmatical Modeling of a Rotarty Vacuum Washer Used for Pulp Washing: A Case Study of a Lab Scale Washer,” Cellulose Chem. Technol., 43 (1-3), 2009, pp. 25-36.

29. Oxby P.W., Thomas D.S. and Kirkcaldy D.M. “A Method for Quantifying Pulp Washer Performance That Does Not Use Flow Rate Measurements”, Tappi, Vol. 69, No. 8, Aug. 1986, pp118-119. (on pg 8)
30. WinGEMS Stream Components Version 5.3, Metso Automation, Copyright 1990-2005.
31. AspenOne V8, Aspen Technology, Inc., Copyright 1994-2013.
32. Schug, B.W. and Trounson, R., “A Case Study of a Pulp Mill Dynamic Simulator,” 2002 TAPPI Fall Conference and Trade Fair Proceedings, San Diego, CA, Sept 8-11.
33. Hart, P.W., “The chemical versus energy tug of war: a pulp mill perspective. Tappi. J., Vol. 10, No. 7, July 2011, pp. 37–42.
34. Gaspar, A.M.R., Machado, L.M.C., Sêco, I.M.C.L., Silva, P.C.M., “Dinamic and Steady-State Process Modeling – Practical Application at Cacia Mill,” XXI Encontro Nacional da TECNICELPA / VI CIADICYP 2010, Oct. 12-15, Lisban. Portugal.
35. Arora, S. and Potucek, F., “Verification of Mathematical Model for Displacement Washing of Kraft Pulp Fibers,” Indian J. of Chem. Tech., Vol. 19, March 2012, pp. 140-148.
36. Potecek, F. and Marhanova, M., “Displacement of Black Liquor from Pulp Fibre Bed,” Chem. Papers, Vol. 54, No. 4, 2000, pp 221— 225.
37. Kukreja, V.K. and Kumar, J., “Rotary Brownstock Pulp Washers Through Mathmatical Models – A Review,” Mathmatical Theory and Modeling, Vol 2, No. 3, 2002, pp. 43-51.
38. Perkins, J.K.; Welsh, H.S.; Mappus, J.H. Brown stock washing efficiency -- Displacement ratio method of determination Source: Tappi, v 37, n 3, p 83-89, Mar, 1954
39. Kukreja, V.K, Ray, A.K., (2009) Mathematical modeling of rotary vacuum washer used for pulp washing: A case of study of a lab scale washer. Cellulose Chem. Technol.,43(1-3), 25-36
40. Nepenin, Y.N., Chemie und Technologie der Zellstoffherstellung, German, ed, Vol.1, Academie-Verlag Berlim 1960

41. Stephenson, J.N., Preparation and treatment of wood pulp, Vol. 1, MacGraw-Hill, London 1952.
42. Grieve, J.R.W., Brown Stock washing, Pulp Paper Mag. Can., 46, nº 8, 601 (1945);
43. Klein, M., McCall, F.S., Lientz, J.R., The effect of certain variables in the operation of rotary vacuum pulp washers, Tech. Assoc. Papers, 30, 562 (1947);
44. Lientz, J.R. "Dilution factor in brown stock washing" Paper Industry and Paper World, v 28, n 6, p 806-809, Sept, 1946;
45. Waters, H.K. ; Bergstrom, R.E. Dilution curve -- Its use in correlation of pulp washing and evaporation Source: Tappi, n 3, p 169-172, Mar, 1955.
46. Wasik, L.S., Mittet, G.R., and Nelson D.J., Tappi J. 83(3): 101(2000)
47. Virkola N-E., (ed.), Puumassan valmistus (in Finnish), Turku, Finland, 1983, p.705.
48. Impco, Como Melhorar o Rendimento de Lavagem de Celulose Kraft crua. In: Convenção Anual da ABCP, VI, São Paulo, ABCP. 1973. p. 75-81.
49. Sankari, M. (2004), Real wash loss compounds in Kraft pulp delignification and bleaching, Doctoral thesis, University of Oulu, Department of Chemistry, Oulu, Finland, p.53.
50. Sillanpää, M. (2005), Studies on washing in Kraft pulp bleaching, Doctoral thesis, University of Oulu, Department of Process and Environmental Engineering, Oulu, Finland, p.41.
51. Bottan, G. (1993), Is COD test a wash-out on washing? Pulp Pap. Intl.35(3):.51
52. Kopra R., Tirri, T., Dahl, O. (2008), Refractive index measurements for brown stock washing loss – laboratory investigations, Appita Journal, 61(5): 408-412.
53. Kopra R., Helttunen J., Tervola P., Tirri T. and Dahl O. (2010), Refractive index measurements for brown stock washing loss – mill investigations, Appita Journal 62(2):131136.
54. Kopra R., Karjalainen S., Tirri T. and Dahl O. (2010), Optimization of pressure filter performance by refractometer - Mill investigations, 64 th Appita Annual Conference Proceeding pp 207-214, Melbourne, Victoria, Australia, 19.-22.4.2010.

55. Kopra, R., Kari, E., Harinen, M., Tirri, T. Dahl, O. Optimization of wash water usage in brown stock washing. Tappi Journal, September 2011 27-33
56. Nilsson, T., Utvinning av sulfitlut for spritfabrikation eller indunstning, Svensk Papperstid., 44, 449, (1941)
57. Dedert, W.G.; Waters, H.K. Measuring brown-stock washer effectiveness Source: Paper Trade Journal, v 141, n 2, p 34-37, Jan 14, 1957
58. Bjorkman, C.B., Ytterligare ron betraffande tvattning av cellulose I en 30 m3:s diffusor, Svensk Papperstid., 50, 43 (1947)
59. Brax, A.J., and Markila, L., M-B diffusortvattningsforfarandet; Svensk Papperstid., 55, 139 (1952)
60. Esila, A.J.,Hakkarainen, N.H., Kokemuksia sulfaattimassan suodatinpesusta (Experiences in Kraft pulp filter washing) Paperi ja Puu, 40, 6, 325-334 (1958)
61. Gothner, K.F.; Robson, H.T. Improved diffuser washing -- Markila-Brax strainers and angle iron supports Source: Tappi, v 35, n 8, p 370-373, Aug, 1952
62. Russell, R., Pulp washing by diffuser, Pacific Pulp Paper Ind., 11, nº2, 21 (1937)
63. Calhoun, T.B.; Pineo, M.B.; Wetherhorn, D. How improvements have changed brown-stock washing of softwood kraft Source: Paper Trade Journal, v 141, n 2, p 30-31, Jan 14, 1957
64. Chandler, J.B., the instrumentation of continuous brown stock washing systems, Southern pulp Paper Mfr, 13, nº4, 54 (1950)
65. Giles, T.l., Pineo, M.B., Operating comparison of standard and valve less deckers on screened, bleachable pine kraft pulp, Tappi, 37, 46 (1954)
66. Morrison, H.A., Pulp washing on vacuum filters, Tech. Assoc. Papers, 13, nº1, 92, 122, (1930)
67. Noble, J.H.; Rich, J.P. Improvements in continuous pulp washing. Source: Paper Trade Journal, v 117, n 20, p 35-36, Nov 11, 1943
68. Orr, W.L. Effect of digester and liquor room operation on pulp washing. Source: Tappi, v 37, n 4, p 162-163, Apr, 1954
69. West, P.H.; Collins, Jr., T.T.; Bergstrom, R.E. Sulphate pulp washing at Thilmaiy Source: Tappi, v 37, n 4, p 137-142, Apr, 1954

70. Jonsson, S.-E. Liquor Recovery Through Pressing Source: Svensk Papperstidning--Nordisk Cellulosa, v 62, n 12, p 425-433, June 30, 1959 Language: Swedish;English
71. Wieters, J.D. Screw press washing of hardwood pulp Source: Tappi, v 40, n 8, p 667-671, Aug, 1957
72. Armstrong, B., Pulp Washing Anon Source: Paper Industry, v 38, n 10, p 848-860, Jan, 1957
73. Brumley, G.W., Corrosion in storage tanks for crude sulphate turpentine, Tech. Assoc. Papers, 30, 569 (1947)
74. Dozier, E.L, Van Derveer, P.D., Why Chesapeake uses screw press washers on kraft board stock, Paper Trade J., 142, nº 51, 32 (1958)
75. Zimmerman, E.; Vranian, H. Pressure washing of kraft brown stock Source: Tappi, v 33, n 12, p 561-566, Dec, 1950
76. McGee, J. (1990) Water-based brownstock antifoams, 24th EUCEPA Conference, Proceedings.
77. Hoekstra, P.M. (2007) Improving washing efficiencies in the kraft pulp mill with new defoamer technology, Tappi Engineering, Pulping & Envirnmental Conference, pp 22-24.
78. Mudaly, G. (2006) Bowater Thunder Bay, Ontario, Kraft mill reduces defoamer usage with new siloxane technology, Paptac 92nd Annual Meeting.
79. Habermehl, J.(2005) Silicone foam control technology for kraft brownstock washing, Solutions!, Online Exclusives, 88 (12)
80. Habermehl, J. (2005) Silicone processing benefits pulp brownstock washing operations, Pulp & Paper Technology (Summer), pp 59-62.

BROWN STOCK WASHING

Ricardo Balleirini Santos
Peter Hart

MEADWESTVACO

Introduction

Why does pulp need to be washed?

- chemicals used in the kraft process are expensive. In order for the kraft process to be economically viable, it is imperative that a very high percentage of the cooking chemicals be recovered and reused. 96-99% of the inorganic cooking chemicals are recovered back into the system

- increased black liquor solids, decreased carryover to the bleach plant and/or paper machine. Wood extractives that are not successfully removed from the pulp by washing tend to concentrate in downstream processes and form sticky deposits upon equipment which in turn can result in the production of off-quality paper through the formation of spots and holes.

Brown stock washing and principles

Washing is based on four basic processes: dilution (note when using dilution washing, it is important to have good mixing in the system), dewatering, diffusion and displacement.

Brown stock washing and principles

- Displacement: a cleaner liquid is added to the pulp mat in order to displace a dirtier one that is being carried with the pulp. The mechanism works via a pressure differential and pushes or displaces a similar amount of water from the mat.

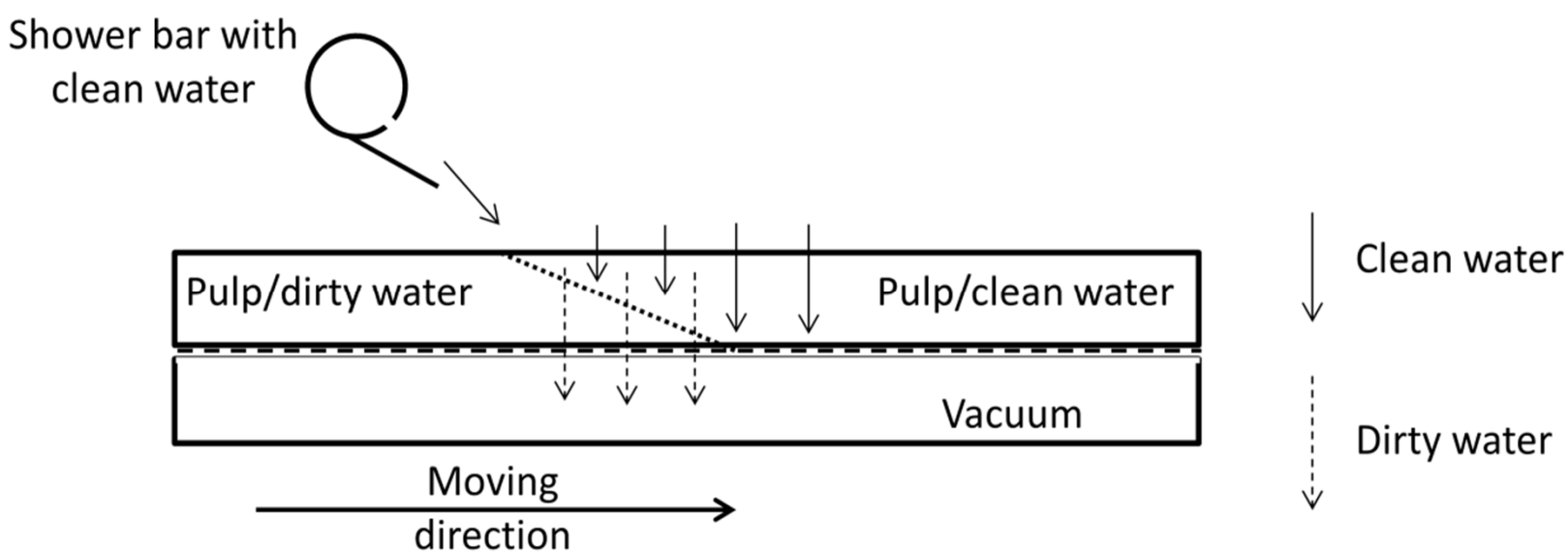

Brown stock washing and principles

- Dilution/Extraction: The combined washing effect may be described as the liquor/pulp suspension being diluted with cleaner water followed by subsequent thickening of the slurry.

- Extraction efficiency is dependent on the ratio of incoming consistency/outgoing consistency .

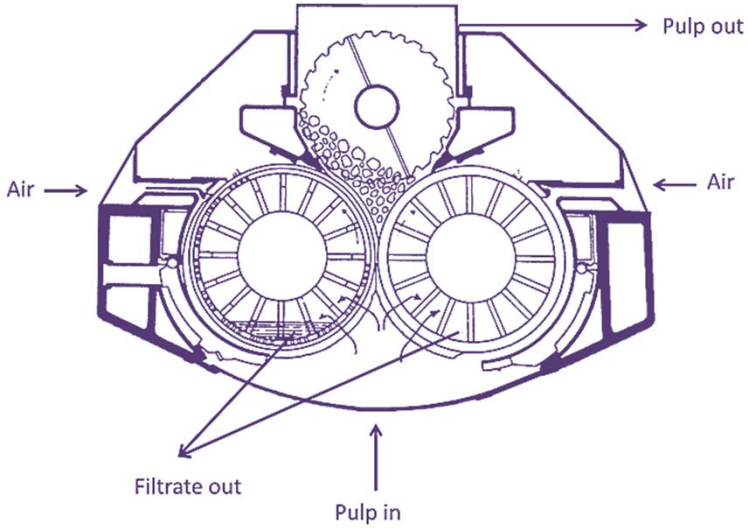

Brown stock washing and principles

- Diffusion is driven by concentration differences.

Diffusion of liquid inside fiber to a cleaner liquid outside of the fiber. It requires relatively long periods of contact.

This concept was first used in Kamyr digesters

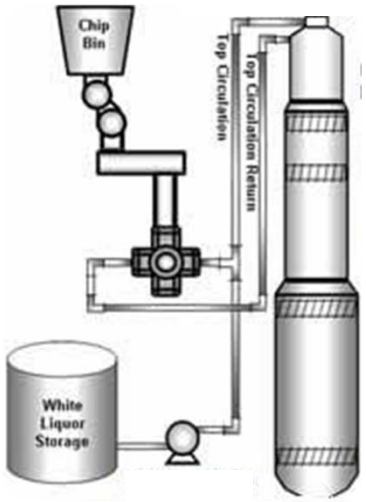

Measurement of washing efficiency

Efficiency of a washing system in its most basic form can be calculated as the ratio of dissolved solids going to evaporation to the amount of dissolved solids initially present in the washing system.

% efficiency = (dissolved solids to evaporation (weight)/ton pulp) / (dissolved solids to system (weight)/ton pulp)

Measurement of washing efficiency

When process or mechanical conditions prevent this from happening, reduced washing efficiency occurs. As a result of these decreases in efficiency, researchers have developed several different ways to determine washing efficiency calculations.

Methods:
Displacement ratio (DR)
The equivalent displacement ratio (EDR)
Norden's method
Solids reduction ratio

Measurement of washing efficiency

Displacement ratio (DR)

Displacement ratio was first developed by Perkins, Welsh, and Mappus [38] to compare the amount of dissolved solids removed from the pulp mat to the maximum amount of solids that could be removed from the pulp mat if the displacement of dirty water in the vat with cleaner shower water was 100% effective.

Measurement of washing efficiency

DR = [(Solids in vat)-(Solids in Mat)]/[(Solids in vat)-(Solids in shower water)]

or

DR = (Sv-Sm) / (Sv-Sw)

Where:

Sv: Solids concentration in the vat

Sm: Solids concentration in the mat leaving the washer

Sw: Solids concentration in shower water

Washing variables

	Dependency
Pulp characteriztics	Pulping process
	Drainability
	Wood specie
Shower liquor	Temperature
	Distribution
	Arrangement
Sheet formation	Specific load
	Vat consistency
	Drum speed
Operational	Dilution factor
	Pulp temperature
	Air entrainment
	Black liquor solids content
	Wire mesh characteristics
	Washer incrustations
	Discharge consistency

Washing equipment

- Rotary vaccum drums,
- Rotary pressurized drums (Compaction baffle (CB) and Displacement Drum (DD) washers),
- Horizontal belt washers,
- Extraction presses,
- Atmospheric diffusers, and
- Pressurized diffusers.

Controlling washing in mill environment

- There are several controls strategies for brownstock washing
- Design will vary from mill to mill
- Use of solids meters to recovery (first washing stage) or conductivity probes in the last washing stage.

Controlling washing in mill environment

- Example:
- Controlling washing efficiency with solids meter in the first stage:

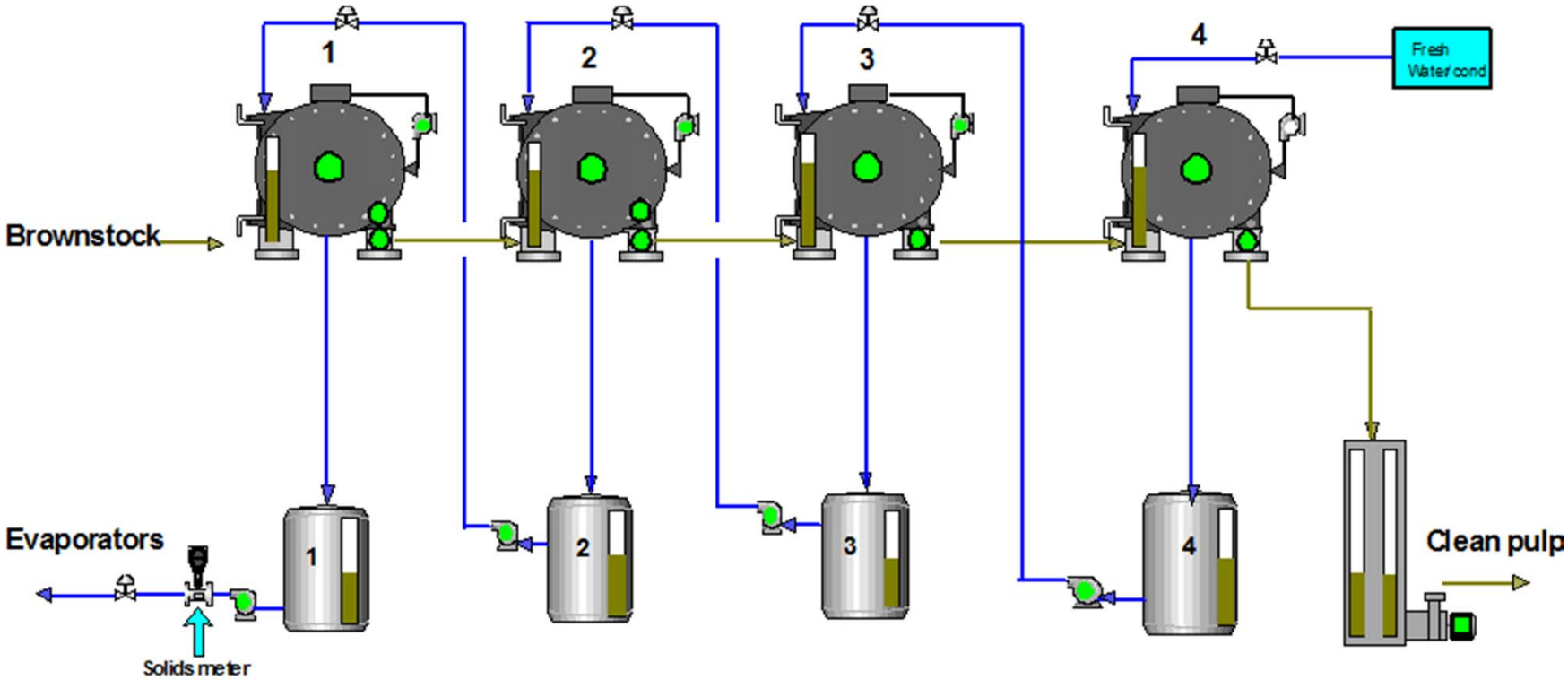

Controlling washing in mill environment

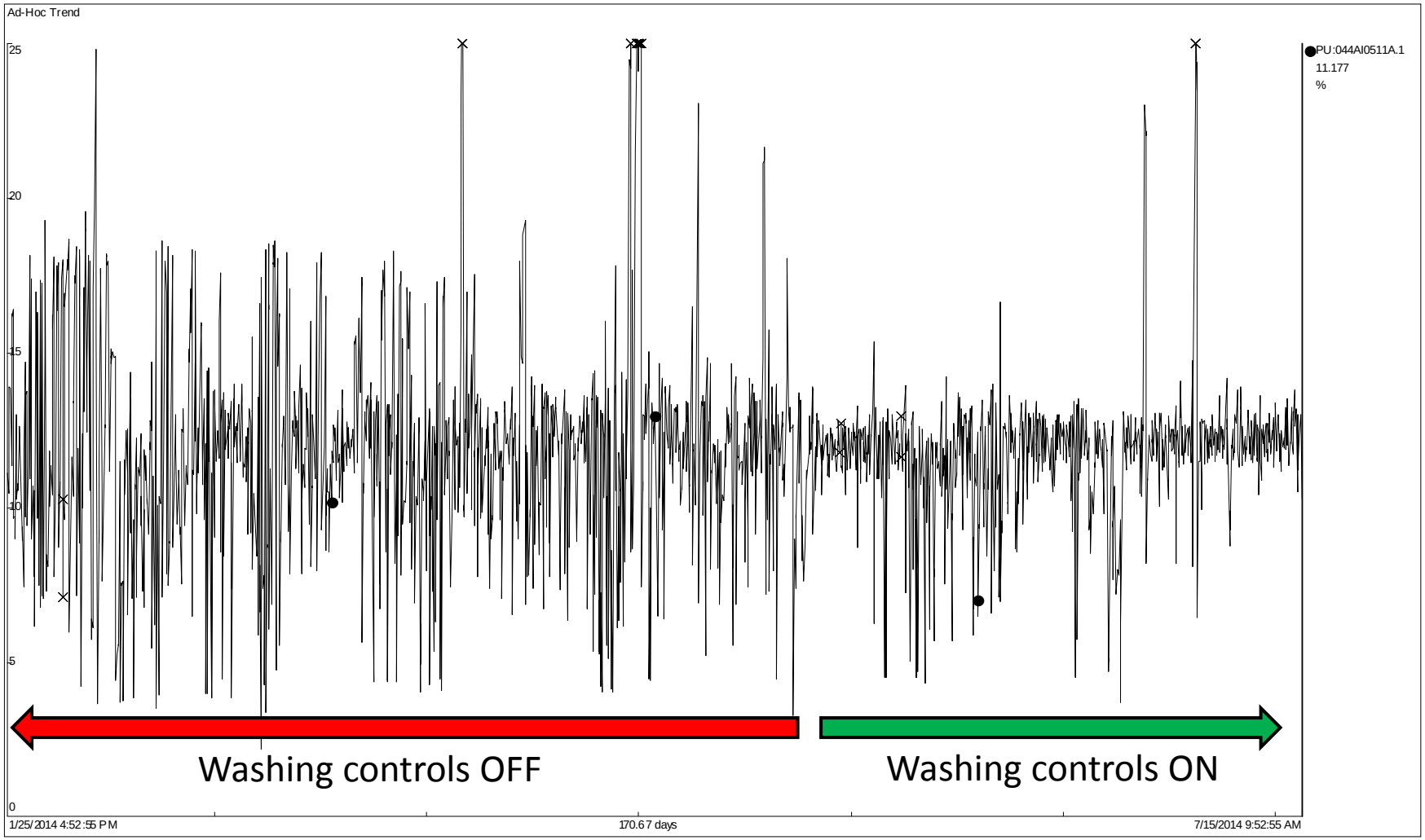

The role of antifoam additives

Antifoam additives allows for a more efficient screening and washing of the pulp by preventing entrapped air from forming in the system which allows for an easier flow of stock through the screens and washers.

In the past, use of mineral and kerosene antifoams:

- Pros: increases in production; decrease of chemical losses in the recovery cycle and decrease of carryover to the bleach plant.

- Cons: pitch deposits of high molecular weight fractions of oil and waxes

The role of antifoam additives

By 1980's silicone antifoam products demonstrated effectiveness at very low dosages allowing for not only foam prevention but also improvements in washer drainage with substantial gains in chemicals for recovery and bleach plant.

As important as product features (proper formulation), feed points in the process are also a key to successful application. Feed points are usually where foam is most problematic and can be easily identified by locations where air entrainment to the system is most severe.

Silicone technology is indeed less problematic than mineral oil. Nevertheless deposits will still occurs if product formulation and/or application are incorrect.

General considerations

Understanding of individual mill specific washing devices together with process variables allows for optimization of brown stock washing operations.

When all of the mill specific considerations are taken into account, it is possible to balance soda loss with evaporator, production, quality, and environmental impacts.